YAMAHA GPX & SX TIA02-03

CHAPTER 5. ELECTRICAL SYSTEM

In the GPX338F/433F, the capacitor discharge ignition system is used.

A capacitor discharge ignition (C.D.I.) system eliminates the need for a mechanical contact breaker and its inherent disadvantages. A simple electronic circuit using a large storage capacitor and a thyristor (Silicon Controlled Rectifier) provides a correctly-timed, high intensity voltage to the spark plug.
The C.D.I. system has many advantages. There is no contact breaker to wear out, become misaligned, or lose its efficiency because of pitted points, increased gap, or contamination. There is no mechanical adjustment required for the contact gap because there are no electrical contacts (points). Only a screwdriver and dial gauge are required to set the timing. There is no mechanical spark advance system to maintain. An electronic circuit automatically provides the correct spark advance at all engine speeds.
The C.D.I. system provides a stronger, quicker primary current pulse. This improves ignition performance, particularly at higher r.p.m.'s. Additionally, the stronger pulse inhibits misfire due to oil fouling and bridging.

The following diagram shows a comparison of ignition performance between the contact breaker system and the C.D.I. system.

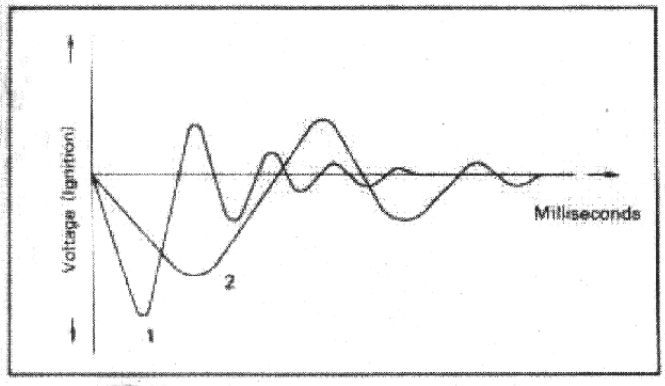

1. C.D.I. system
2. Contact breaker system

Fig. 5-1

C.D.I. system (1) brings higher and quicker ignition voltage than contact breaker system (2).

(1) C.D.I. systems and its function
The principal parts of the Yamaha C.D.I. System and their primary function(s) are as follows:

1) Magneto — The Yamaha C.D.I. magneto is mounted on the crankshaft and incorporates a charging coil for the ignition capacitor and a pulser coil to generate a trigger pulse for ignition timing.
2) C.D.I. Unit — The "black box" of the system. This solid state, encapsulated unit contains the electronic control circuitry, including the ignition capacitor, silicon controlled rectifier (S.C.R.), charging current rectifiers, and automatic spark advance circuit components.
3) Ignition Coil — A "step-up" transformer which increases the voltage from the ignition capacitor to the high voltage is used to "fire" the spark plug.

(2) Description of operation

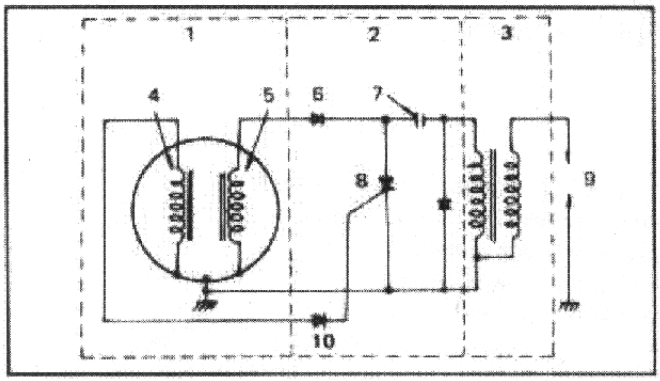

1. Magneto
2. C.D.I. unit
3. Ignition coil
4. Pulse coil
5. Charge coil
6. Diode
7. Ignition capacitor
8. Thyristor
9. Spark plug
10. Diode

Fig. 5-2 C.D.I. Schematic

As the magneto turns it induces an alternating current (A.C.) in the charge coil. This A.C. current is rectified to a direct current (D.C.) by the diode in the C.D.I. unit and charges the Ignition Capacitor to approximately 350 volts. (Fig. 5-3)
The thyristor (Silicon Control Rectifier) prevents the discharge of the ignition capacitor until it receives a positive trigger pulse from the Pulse Coil.

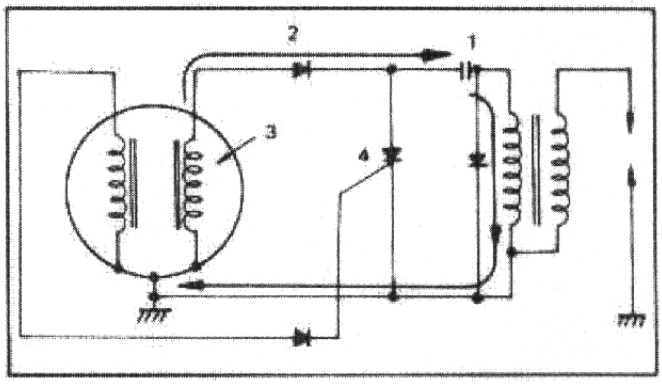

1. Ignition capacitor
2. Diode
3. Charge coil
4. Thyristor

Fig. 5-3 Ignition Capacitor Charging

When the mark on the rotor aligns with the mark on the pulse coil (see Fig. 5-4), a trigger pulse is sent to the thyristor gate. (Fig. 5-5) This pulse allows the thyristor to conduct and the current stored in the ignition capacitor will quickly flow through the primary winding of the ignition coil. This induces a high voltage in the ignition coil secondary winding which causes a spark to jump across the electrodes of the spark plug.

Automatic Spark Advance System. The output voltage of the pulse coil will increase as engine speed increases.

This causes the thyristor to conduct earlier, resulting in an advanced spark.

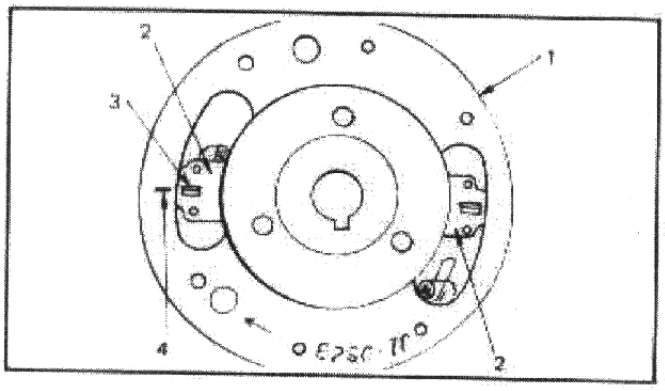

1 Rotor
2 Pulser
3 Alignment mark
4 Timing mark

Fig. 5-4

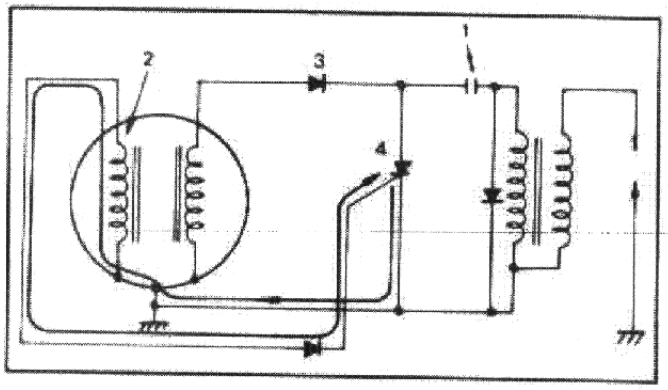

1 Ignition capacitor
2 Pulse coil
3 Diode
4 Thyristor

Fig. 5-5

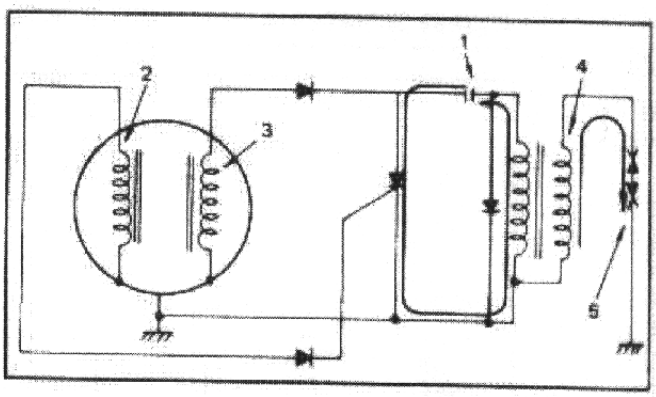

1. Ignition capacitor
2. Pulse coil
3. Charge coil
4. Ignition coil
5. Spark plug

Fig. 5-6 Ignition Capacitor Discharges and Spark Plug Fires

(3) C.D.I. wiring connections

The wiring between the magneto, C.D.I. unit and ignition coil uses couplers to prevent any wrong connection. But when connecting the ground circuit and the ignition coil, particular care should be taken. If these are connected wrong, the C.D.I. unit will become inoperative.

1) Wiring notes

a) Connection must be done accurately.
Special care is required for connection of the ground circuit and ignition coil.

b) The C.D.I. unit and ignition coil should be installed in the specified positions. If position is to be changed, a dry and airy place should be selected.
Keep free from mud and water

c) To remove the rotor, be sure to use the rotor puller (an accessary tool). Avoid using a hammer, or the rotor may be damaged.

d) Handle the C.D.I. unit with special care. If you should drop it, the incorporated electronic components will be damaged.

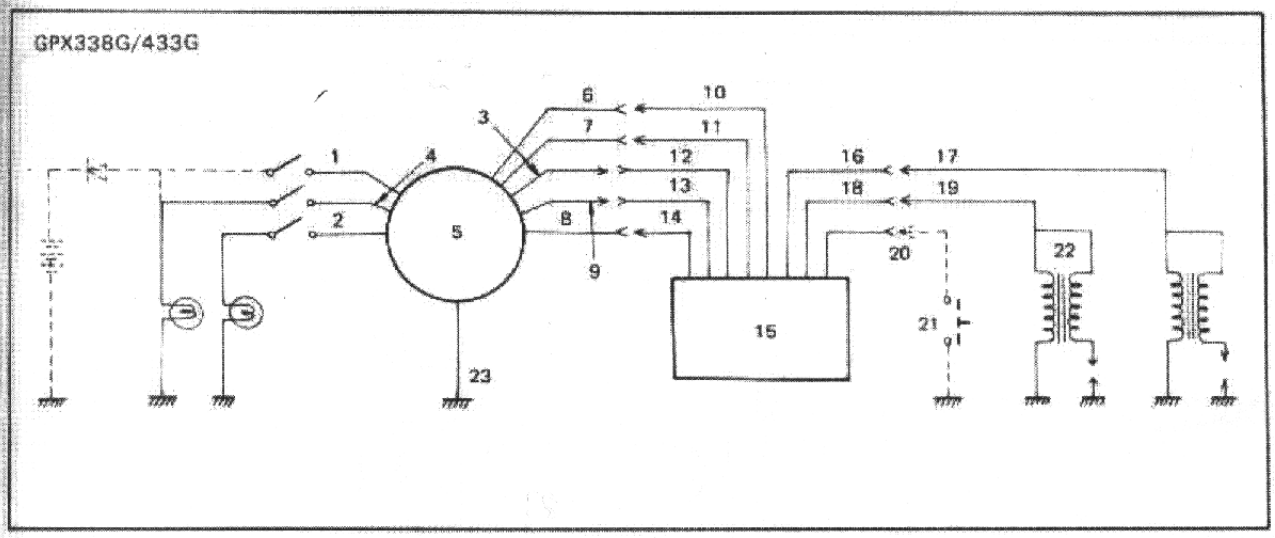

1. Yellow
2. Green
3. White/red
4. Red/white
5. Magneto F280-51
6. Brown
7. Blue
8. Black
9. White/black
10. Brown
11. Blue
12. White/red
13. White/black
14. Black
15. C.D.I. unit TIA02-03
16. Grey
17. Black
18. Orange
19. Black
20. Black/white
21. Stop button
22. Ignition coil (CM61-20B) (CM61-20L)
23. Black

Fig. 5-7

(4) Checking the magneto and ignition coil
Avoid using an improper tester (insulation resistance testers or other testers with a battery of large capacity)

The use of alarge capacity tester may ruin the C.D.I. unit as specified below.
To locate the cause of trouble (broken coil, short-circuit, etc.) measure the resistance of each winding.

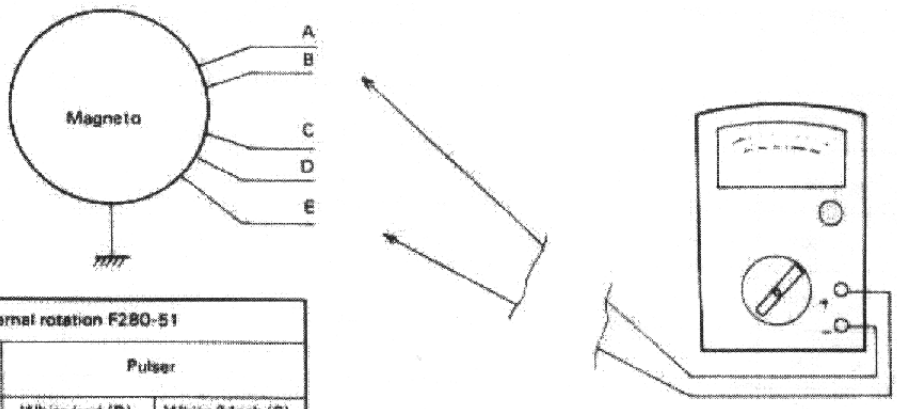

Model	External rotation F280-51		
Parts to be mesured	Charging coil	Pulser	
Lead wires	Brown (B) Blue (E)	White/red (D) Black (A)	White/black (C) Black (A)
Resistance (Ω)	100	85	

Fig. 5-8

(5) Checking the Ignition Coil

Model	CM61-20	
Parts to be measured	Primary winding	Secondary winding
Resistance (Ω)	0.61 ±10%	6,000 ±20%

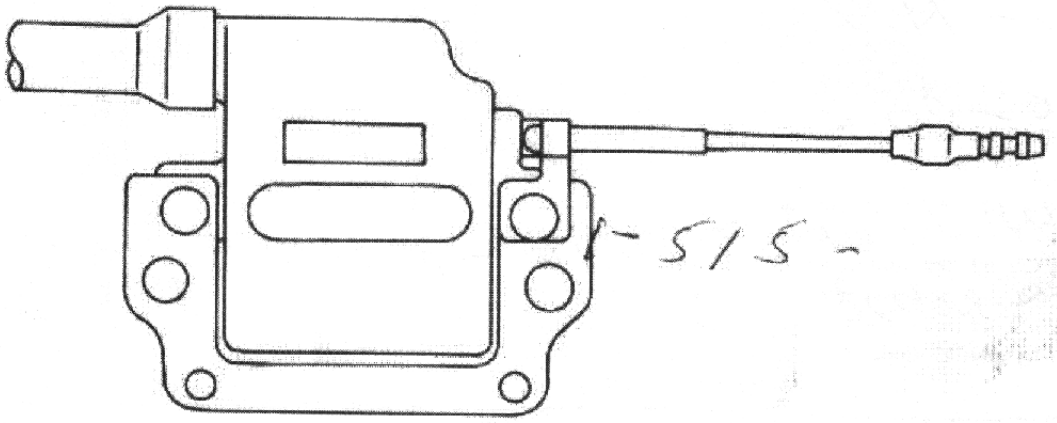

Fig. 5-9

(6) Checking the C.D.I. unit

The following are the conditions of the C.D.I. unit which can be used to check electronic parts and connectors by applying the Yamaha pocket tester to couplers.

Tester − \ Tester +		Stop	Ground	Charging coil		Pulser		Ignition	
		Black/white	Black	Brown	Blue	White/red	White/black	Grey	Orange
Stop	Black/white		—	—	—	—	—	—	—
Ground	Black	1.5		7	7	—	—	400 – ∞	400 – ∞
Charging coil	Brown	7	170		200	—	—	400 – ∞	400 – ∞
	Blue	7	170	200		—	—	400 – ∞	400 – ∞
Pulser	White/red	150	80	100	100		—	400 – ∞	400 – ∞
	White/black	150	80	100	100	—		400 – ∞	400 – ∞
Ignition	Grey	700 – 1,000	1,000 – 2,000	1,000 – 2,000	1,000 – 2,000	—	—		2,000 – ∞
	Orange	700 – 1,000	1,000 – 2,000	1,000 – 2,000	1,000 – 2,000	—	—	2,000 – ∞	

Notes:

1. The figures in the above chart show tester readings when the tester is set in the range of Ω x1000. If measured with the tester set in other ranges, the figures will be different because of diodes built in the C.D.I. unit.
2. When making tests using the orange terminal, the condenser should be discharged by contacting the orange lead with the black/white lead.

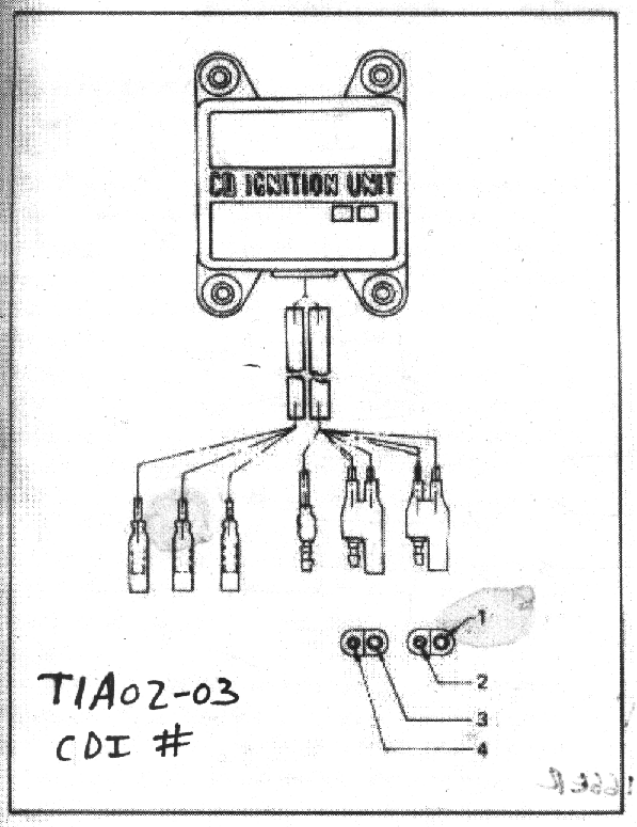

1. White/red
2. Brown
3. White/black
4. Blue

Fig. 5-10

Notes:

1. Connections must be correct.
   To avoid connection errors, couplers are used for connections of the flywheel magneto, C.D.I. unit and ignition coil.
   Take special care not to make wrong connections with the ground circuit, ignition coil, lighting circuit, etc.
2. Magnet removal
   To remove the magnets from the flywheel magneto, use the flywheel magnet puller (special tool).
   Never attempt to use a hammer. Damage may be caused to the magneto or the crankshaft.
3. Use care not to give a shock to the C.D.I. unit.
   Should you drop the C.D.I. unit to the ground, internal parts may be damaged.

(7) Ignition timing adjustment

1) Install the dial gauge and dial gauge stand #2 in the plug hole of the cylinder head.
2) Turn the flywheel magneto to bring the piston to top dead center, and set the dial gauge to zero.

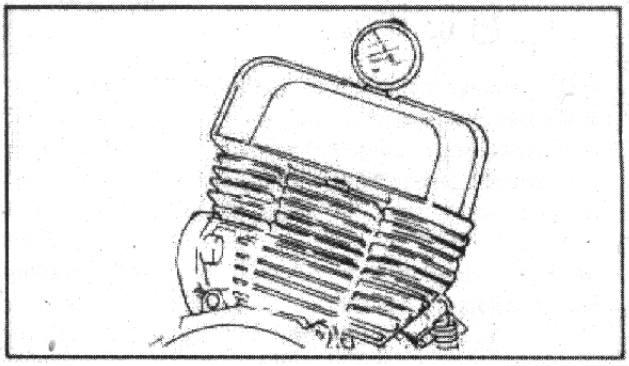

Fig. 5-11

3) Turn the flywheel magnet counter-clockwise, and set the ignition timing at 0.063 in. (1.6 mm) B.T.D.C. This adjustment This adjustment can be done by turning the pulser. Loosen the two pan head screws tightening the puler, adjust the pulser, so that the match mark on the flywheel magnet is aligned with timing mark on the pulser.

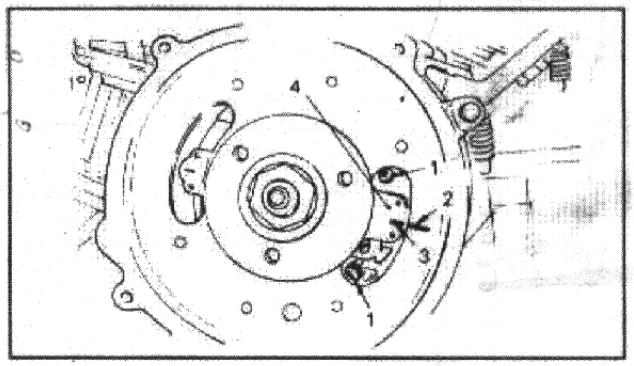

1. Pan head screw
2. Timing mark
3. Alignment mark
4. Pulser

Fig. 5-12

Note:

1) The difference in the ignition timing between the two cylinders should be zero.
2) To adjust the ignition timing with the engine being mounted, remove the tension spring, and then remove the exhaust pipe assemblies (R & L), starter assembly and starter pulley.

TECHNICAL BULLETIN

This Bulletin Supersedes Snowmobile Bulletin S8-002.
Please Remove and Destroy Snowmobile Bulletin S8-002.

SNOWMOBILE
S8-002A

1974-1979 SNOWMOBILE CDI SYSTEMS
BASIC TROUBLESHOOTING

The main problems lie in accurate testing of these units. Pay careful attention to the following hints.

HELPFUL HINTS FOR MECHANICS

When you are checking out a CDI system according to the specifications, make sure you are using the right specifications. Check the model identification.

Save yourself a lot of trouble by checking the wires and connectors for a clean, tight fit. Check switches for proper operation. Open wires and loose or dirty connections cause unusually high resistance readings that will mislead you into believing the component is faulty.

If there is corrosion on the pulser coil or on the rotor magnets you can clean it off with fine emery cloth. Just don't forget to recoat the sanded area with a lacquer so that the rust doesn't come back a few days later. Clear fingernail polish works well and is easily available.

When you are checking the resistance of the coils, remember that the specifications given are for coils at room temperature. Hot or cold coils will have different readings. Give all your test readings a tolerance of about 10% against the specifications.

Make sure your Pocket Tester leads are securely connected to the component you are checking. If there is resistance in that connection, it will throw off your test reading.

Don't forget to zero the Pocket Tester scale each time you change scales and before taking your readings. The needle should line up with zero on the right hand side of the scale with the tester leads connected to each other.

For some tests you will want to use the OHMS x 1 scale. Other tests will require the OHMS x 100 scale. Be careful in choosing and reading the correct scale or your readings will be in error. This is a common problem for mechanics who are not familiar with the Pocket Tester from using it daily.

When a part or wire grounds to the frame, be sure to read the actual resistance through that ground connection. Connect the negative probe to some other clean area on the frame or engine case and the positive probe on the "hot" terminal or wire end as usual.

The most frequent component to fail is the charge coil. Because it supplies current to both plugs, it is common to both sides.

A REVIEW OF THE BASIC COMPONENTS AND THEIR OPERATION:

The CDI system is composed of 4 main parts:

1. A single charge coil in the magneto supplies charging voltage which is stored in the capacitor inside the CDI unit (black box).

2. A PULSER COIL also in the magneto sends a small firing signal to the thyristor (electronic switch) also in the CDI unit.

3. The CDI UNIT contains the capacitor (storing the charge), the thyristor (electronic switch) to release the charge, and various transistors in a circuit designed to channel the voltage in the proper directions. The charge from the capacitor is released through the ignition coil to ground. The complexity of the CDI unit and the necessity to seal it against moisture and heat make it difficult to test the CDI unit itself, effectively.

4. The IGNITION COIL functions to step up the basic voltage dumped from the capacitor in the CDI unit until it is powerful enough to jump across the spark plug gap. This ignition coil is actually composed of two parts: a primary winding and a secondary winding. The ignition coil works and is tested in the same way as any AC magneto ignition coil.

There are 4 types of CDI ignition systems used on Yamaha snowmobiles.

SYSTEM	MODEL	YEAR
1 Charge Coil 2 Pulser Coils 2 Ignition Coils	GPX F & G EX340/440 SRX340/440	1974-75 1976 1976
2 Charge Coils #1 & #2 2 Pulser Coils 1 Ignition Coil	EX340/440A&B EX440C	1977-78 1979
2 Charge Coils #1 & #2 1 Pulser Coil 1 Ignition Coil	ET250C ET300C ET340B ET340C/EC EXL540C	1979 1979 1978 1979 1979
2 Charge Coils #1 & #2 (Charge Coil #2 serves as Pulser Coil) 1 Ignition Coil	SRX440A/B/C	1977-79

NOTE: Checking a CDI system is a simple process of elimination. Here is our recommended method:

1974 GPX 433

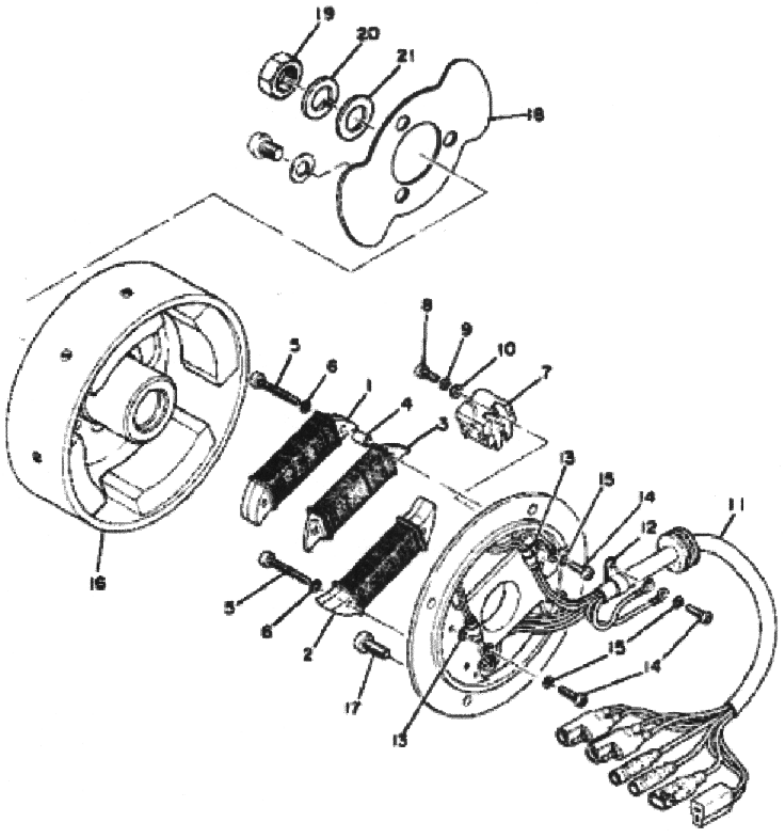

Pulser # 878-85543-10-00
Charge Coil # 99999-00850-00 (878-85541-10)